# VL-EMS II

## Description

The VL-EMS-Ⅱ equipment management module has higher reliability, larger Capacity, serves for more kinds of communication modules than VL-EMS. It is mounted in the first slot of the VLink platform to provide local monitoring and configuration, as well as remote management. The VL-EMS-Ⅱ module contains the strong function of DHCP Client. It is able to communicate with the rest of the modules via USB port for local access or RJ45 Ethernet port for remote access. The VL-EMS-Ⅱ module provides NMCP (Network Management Console Program) for monitoring and configuration along with a PC compatible graphical user interface (GUI). The VL-EMS-Ⅱ integrates the SNMP protocol and the SCTE-HMS-MIBs for remote access via a standard SNMP agent

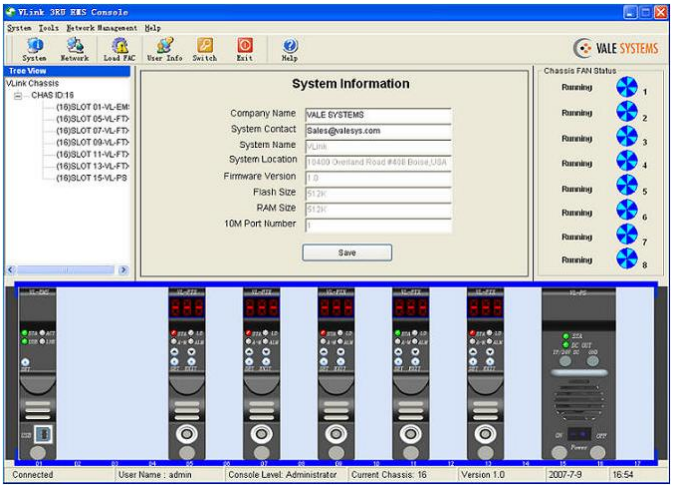


## Features

- Large capacity for more modules
- Short circuit protection
- USB interface for local monitoring and setting
- 10/100Mbps Ethernet port for com munication with SNMP
- DHCP Client
- LEDs to indicate data access activity
- Temp monitoring and fan status indication
- Hot-swap design
- Firmware field upgradeable


10400 Overland Road #408 Boise, ID 83709-1449, USA
Tel: 208.935.6317 Fax: 208.935.6234
Http://www.valesys.com
Document #: 01-01-016 Revision: 1.2

# VL-EMS II

## Specification

| Parameter | Unit | Specification | Note |
|---|---|---|---|
| Communication Interface | | | |
| USB port | | USB B type，115200bps | -- |
| Ethernet port | | RJ45，SNMP，10/100Mbps, manual or DHCP | -- |
| Other | | | |
| Operating temperature | ˚C | -20 to 70 | -- |
| Storage temperature | ˚C | -40 to 80 | -- |
| Humidity | % | Max 85%，non-condensing | -- |
| Dimensions | mm | 395Dx24Wx128H | -- |
| Weight | Kg | 1 | -- |
| Power consumption | W | <3 | -- |

## Ordering Information

| | | | | | |
|---|---|---|---|---|---|
| VL | -- | EMS | -- | II | XX |
| VL | -- | CS | -- | II | XX |
| VL | -- | NC | -- | II | XX |
| | | | | | Customer specify |


10400 Overland Road #408 Boise, ID 83709-1449, USA
Tel: 208.935.6317 Fax: 208.935.6234
Http://www.valesys.com
Document #: 01-01-016 Revision: 1.2

# VL-EMS II

| Electrical/Physical Performance | | | |
|---|---|---|---|
| Supply voltage | VDC | 24 | -- |
| Power consumption | W | <8.5 | -- |
| Dimensions | mm | 410D x 24W x 128H | -- |
| Weight | Kg | 1.2 | -- |

## Block Diagram

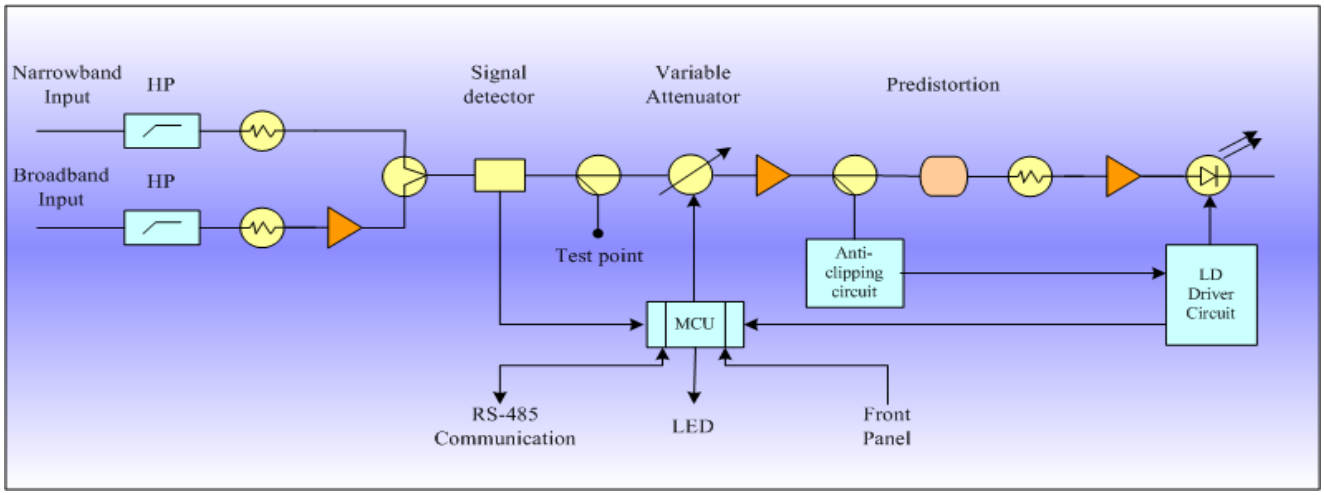


## Ordering Information

| 3RU-FTX-Ⅱ-1310 | -- | XX | -- | XXX | -- | XX |
|---|---|---|---|---|---|---|
| Wavelength:<br>1310nm | | Optical power:<br>03 = 3dBm<br>06 = 6dBm<br>……<br>13 = 13dBm | | Connector:<br>SA = SC/APC | | Customer specify |


10400 Overland Road #408 Boise, ID 83709-1449, USA
Tel: 208.935.6317 Fax: 208.935.6234
Http://www.valesys.com
Document #: 01-01-016 Revision: 1.2