VL-RRX-02 4x2 Reverse Receiver

Description

The VL-RRX-02 is a CATV Return Path Receiver Module with four optical inputs. The module is implemented by a low noise PIN diode and a high output level RF amplifier. The module features two independent RF out-put ports, which are located on the rear panel of the receiver module, providing 56dBmV output level. Monitoring and configuration setting of the receiver module are all achieved via the front panel and VL-EMS equipment management module.

Specifications

Parameter	Unit	Specification	Note
Optical Performance			
Wavelength	nm	1200-1600	--
Input port		4	--
Input power	dBm	-18 to 0	--
Return loss	Db	>45	
Connector		SC/APC	--
RF Performance			
Bandwidth	MHz	5-220	--
Return loss	-dB	≥16	--
Flatness	dB	+/-0.75	--
Impedance	ohm	75	--
Output level	dBmV	≥56	1
Test point	dB	-20+/-0.75	--
CNR	dB	≥50	1
IMD2	-dBc	≥55	2
IMD3	-dBc	≥60	2
MGC	dB	0 to -20	--
Switching time	ms	<15	
Connector		F-female	--
Electrical/Physical Performance			
Supply voltage	VDC	24	--
Power consumption	W	<10	--
Dimensions	mm	410D x 24W x 128H	--
Weight	Kg	1.2	--

Features

- Two independent return path receivers in a single module with redundancy functionality
- Hot-swap capability
- Bandwidth 5~220MHz
- 56dBmV output level
- -18 to 0dBm input optical power
- Manual attenuation control
- RF output test point

1.-7dBm optical input，OMI=16%，0dB attenuation setting
2.56dBmV output，two tone test，f1=13MHz，f2=19MHz

10400 Overland Road #408 Boise, ID 83709-1449, USA
Tel: 208.935.6317 Fax: 208.935.6234 Http://www.valesys.com
Document #: 01-01-025 Revision: 1.0

Absolute Maximum Ratings

Stresses in excess of the absolute maximum ratings can cause permanent damage to the device. These are absolute stress ratings only. Functional operation of the device is not implied at these conditions. Exposure to absolute maximum ratings for extended periods can adversely affect device reliability.

Parameter	Symbol	Unit	Min	Max
Operating temperature	Top	˚C	0	50
Storage temperature	Tstg	˚C	-40	70
Humidity	H	%		85, non-condensing

Block Diagram

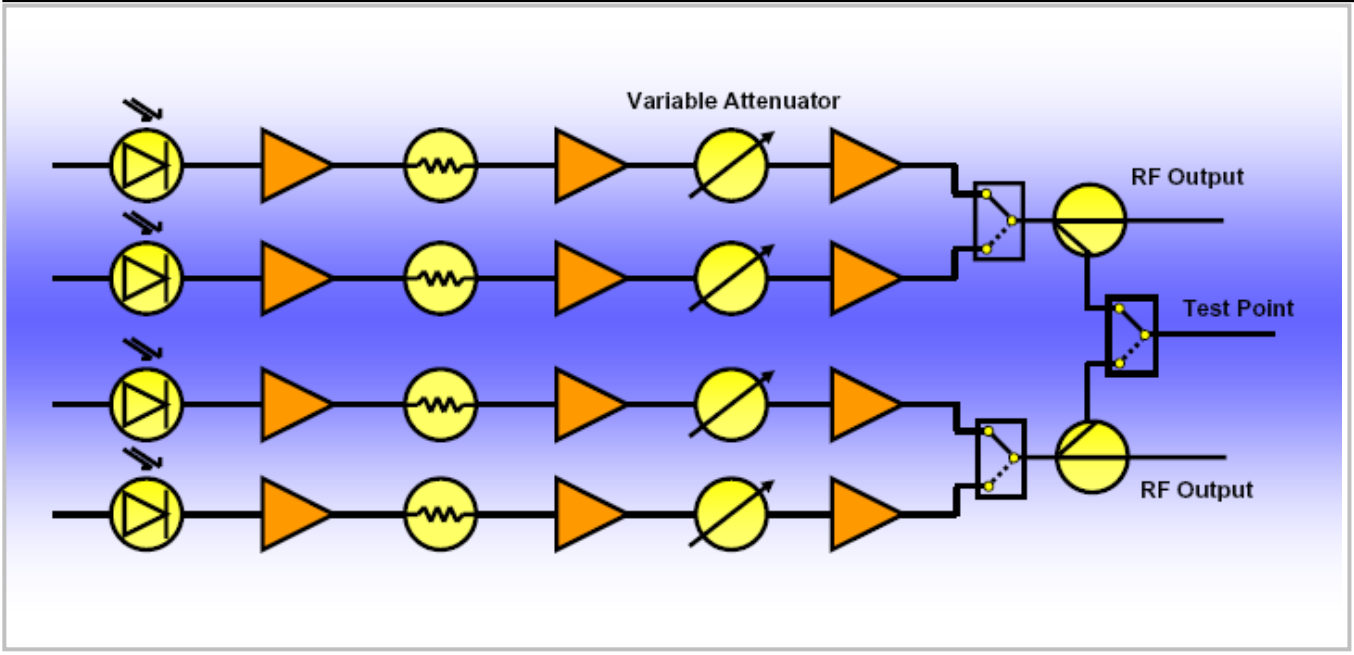

Ordering Information

VL-RRX-02	--	XX
		Customer specify

10400 Overland Road #408 Boise, ID 83709-1449, USA
Tel: 208.935.6317 Fax: 208.935.6234 Http://www.valesys.com
Document #: 01-01-025 Revision: 1.0