VS1550FAH High Power Optical Amplifier

Description

The VS1550FAH series High Power 1550nm Optical Amplifier is a VLink Light family of high performance 1550nm EDFA Technology Optical Amplifier. VS1550FAH providing 28 dBm ~ 40 dBm output power with built in WDM per each port. It has an option of 4, 8, 16, 32 or 64 outputs to save you space on extra external splitters.

This VS1550FAH can be applied on PON Network and make Triple Play, FTTH easily implemented in your network. To make CATV operators run their system easily, VS1550FAH also designed with an built in Micro computer. It allows engineer to monitor the parameters using front panel switch button or RJ45 interface come with the equipment.

Vlink EDFA has an unique design that makes the light being amplified in an absolute clean and low noise environment.

Features

- YEDFA Technology
- 28 dBm ~ 43 dBm Output Power
- 4, 8,16, 32, 64,128 Output Ports
- Wide Input Optical Power Range
- Built in WDM per each Port
- Unique “PUMP” Heat Dissipation design
- Special design iron box cooling down and Protecting Laser/Pump
- Modular Fans with superior ventilation design for perfect temperature control
- Modular Power Supply
- Noise figure <5.5dB
- Front Panel Switch allow easy Status Monitoring and configuration
- RJ45, SNMP Interface
- LCD Display shows Status and Alarm

10400 Overland Road #408 Boise, ID 83709-1449, USA
Tel: 208.935.6317 Fax: 208.935.6234
Http://www.valesys.com
Document #: 01-01-031 Revision: 1.0

VS1550FAH High Power Optical Amplifier

Specification

Parameter	Unit	Specification	Note
Optical Performance			
Wavelength	nm	1535-1565	--
Input optical power	dBm	-5 to +10	--
Output port	ports	4 or 8 or 16 or 32 or 64 or 128	
Output optical power	dBm	28dBm to 43dBm	Total Power
Stability	dB	+/- 0.2	--
Polarization dependent gain	dB	<0.5	--
PMD	ps	<0.5	--
Return loss	dB	>50	--
Noise figure	dB	<5.5	--
Connector		SC/APC or LC/APC	
Electrical/Physical Performance			
Supply voltage	V	110~260 VAC or -48VDC	--
Power consumption	W	<50(≤36dBm) or <80(≥37dBm)	--
Dimensions	mm	435D x 482W x 44H	--
Weight	Kg	6	--
Operating temperature	˚C	-5 to +50	--
Storage temperature	˚C	-40 to +55	--
Humidity	%	85, non-condensing	--
Built IN WDM Performance			
Built in WDM for PON Input		32/64/128 Ports EDFA include 32/64/128 OLT Input Ports with WDM	
Wavelength	nm	Transmission Band: 1550, Reflection: 1310/1490,1270/1577	
Testing Wavelength	Nm	T:1545~1565, R:1260~1360&1480~1500&1575~1581&1610~1660	
Insertion Loss	dB	Transmission band: ≤ 0.8dB;;Reflection Band ≤ 1.0dB	
PON signal pass through		When EDFA is OFF	
Bulit IN OPTICAL SWITCH Performance			
Number of Inputs		2	
Insertion Loss	dB	≤ 1.0	
Switching time	second	<0.5	
Built IN RF RECEIVER Performance			
RF LEVEL @-6 to 0dBm		Minimum 70dBuV Manual Adjustable	
CNR	dB	>47	

10400 Overland Road #408 Boise, ID 83709-1449, USA
Tel: 208.935.6317 Fax: 208.935.6234
Http://www.valesys.com
Document #: 01-01-031 Revision: 1.0

VS1550FAH High Power Optical Amplifier

Ordering Information

Character #	1	2	3	4	5	6	7	8	9	10	11	12	13		14	15	16	17
Field #	1				2		3			4	5	6	7		8		9	10
Model #	VS1550FAH			-	1	9	1	6	-	N	S	N	L		A	2	N	R

FIELD		
1	VS1550FAH	High power EDFA
2	Output power Per Port:	
	13	13dBm
	14	14dBm
	15	15 dBm
	16	16 dBm
	17	17 dBm
	18	18 dBm
	19	19 dBm
	20	20 dBm
	21	21 dBm
	22	22 dBm
	23	23 dBm
3	Optical Outpout Ports:	
	04	4 ports
	08	8 ports
	16	16 ports
	32	32 ports
	64	64 ports
	A1	128 ports
4	Optical Switch:	
	B	Built in
	N	None
5	Optical Input Connector:	
	S	SC/APC
	F	FC/APC
	L	LC/APC
6	PON Port Connector:	
	S	SC/UPC
	L	LC/UPC
	A	LC/APC
	N	None
7	Optical Output Connector:NF	
	S	SC/APC
	L	LC/APC
8	Power:	
	A1	1 AC Power (110~260 VAC)
	A2	2 AC Power (110~260 VAC)
	D1	1 DC Power (-48VDC)
	D2	2 DC Power (-48VDC)
	AD	1 AC Power and 1 DC Power (110~260 VAC or -48 VDC)
9	RF port:	
	B	Built in RF output port
	N	None
10	Power Connect:	
	F	Front
	R	Rear

10400 Overland Road #408 Boise, ID 83709-1449, USA
Tel: 208.935.6317 Fax: 208.935.6234
Http://www.valesys.com
Document #: 01-01-031 Revision: 1.0

VS1550FAH High Power Optical Amplifier
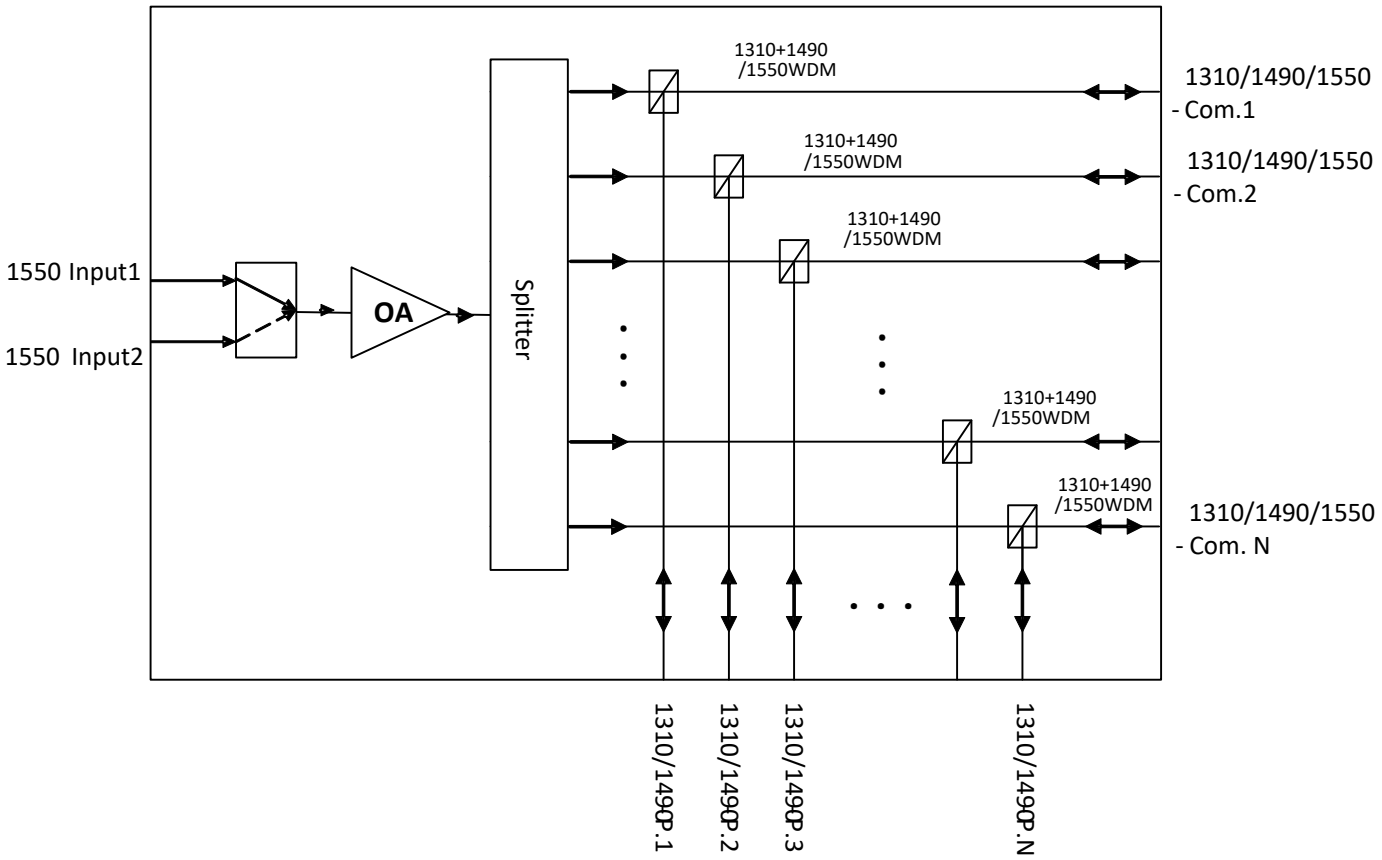
Schematic