V4N-P 4 port Node

Description

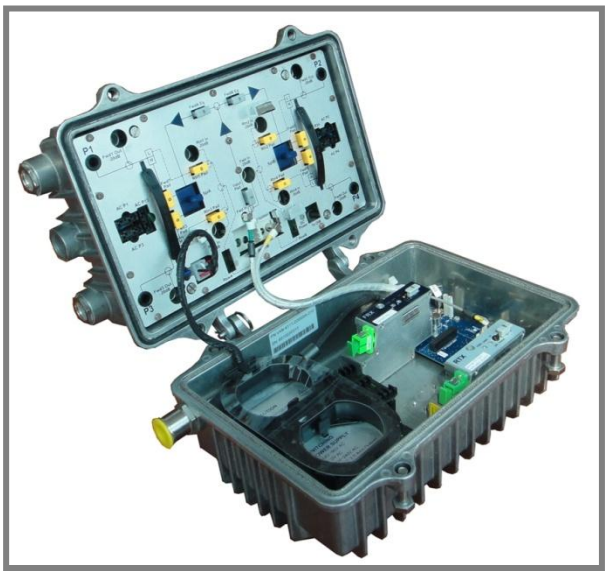

The V4N-P series are economic platform with high performance, 4 passive output ports, and compact size optoelectronic nodes with bandwidth up to 1000MHz.
It is capable of providing 50dBmV output level with 4 ports at 1000MHz. Modular design enables the Multiple service operator to choose the minimal configuration as the present requirement and expand when need in the future. The V4N-P series are able to accommodate 2 forward receiver modules and 2 return path transmitters, with redundancy functionality. And the high gain receiver for deep optical power input is optional.
The V4N-P can also configure with a HMS transponder. Conjunction with the Network Management System, the node supports remote monitoring of critical operating parameters, and remote controlling of switching parts.
The V4N-P can upgrade to different frequency by change some plug in modules.
The goal for the product is to provide system designer an economical and robust node in CATV optical network.

Features

- 1000MHz bandwidth
- 50dBmV high level 4 port output
- JXP PAD for level attenuation
- 15A power current passing capability
- Designed with Docsis HMS transponder
- Band diplexer selection for 42/54, 65/85, 85/105 and 204/258
- HP/LP is plug-in type
- The bandwidth of Return path Transmitter is 5 to 300MHz
- Linear equalizer using JXP PAD for slope adjustment
- Wide operation temperature range -40~+60 degree C
- With optical power TP and LED display for receiver and transmitter module
- With capability of field upgrade operation for redundant 2pcs of forward receiver and 2pcs of return transmitters
- Wide optical input operation range, -3dBm to +2dBm for standard optical input
- 15MHz HP

10400 Overland Road #408 Boise, ID 83709-1449, USA
Tel: 208.935.6317 Fax: 208.935.6234
Http://www.valesys.com
Document #: 01-01-018 Revision: 1.6

V4N-P 4 port Node

Specification

Parameter		Unit	Specification
Reverse			
Optical Performance			
Wavelength		nm	1310+/-20,1550+/-50
Return Loss		dB	45
General			
Bandwidth		MHz	5 to 42/65/85/204
Flatness		+/-dB	0.75
Wink Switch		-dB	0, 6, <30
Input level		dBmV	15~25
Gain		dB	32
RF Input TP		-dB	20+/-1
Slope		dB	0+/-1
RFoG Performance (Only for Node w/ Burst Mode RTX)			
RF trigger level on	(add 7dB more attenuation on RTX for segmented configuration)	dBmV	10+/-1
RF trigger level off		dBmV	5+/-2
Burst on delay time		us	<1.5
Burst off delay time		us	<4
NPR		dB	40
NPR Dynamic Range		dB	20
Forward Parameters			
Optical Performance			
Wavelength		nm	1310~1550
Input power		dBm	-3 to +2(standard receiver);
Optical return loss		dB	>40
Responsibility		A/W	>0.85
RF Performance			
Bandwidth		MHz	54/85/105/258 to 1000MHz
Flatness		+/-dB	0.75 @ Slope 14dB@54/85/105 to 1003 MHz 0.75 @ Slope 11.5dB@258 to1003 MHz
Input current capacity		Amperes	15
Return Loss		-dB	16
Test Point Level		-dB	20+/-1
Level control steps		dB	1 (0~20)
Slope control steps		dB	1 (7~21, with inner 7dB)
Link Performance (0dBm optical input, OMI 3%, 20Km optical fiber)			
Operational level feeders(4 ports)		dBmV	36/43/50 at 54/550/1000MHz 40/50 at 258/1000MHz (Analog) 33/44 at 258/1000MHz (All QAM)

10400 Overland Road #408 Boise, ID 83709-1449, USA
Tel: 208.935.6317 Fax: 208.935.6234
Http://www.valesys.com
Document #: 01-01-018 Revision: 1.6

V4N-P 4 port Node

MER	dB	>40 (125CH QAM (258-1000MHz)
BER	dBc	<1E-9 at Pre FEC
General Specifications		
Operating temperature	˚C	-40 to +60
Humidity	%	95%，non-condensing
Water and Dust resistance	R	IP68
Housing dimensions	mm	LxHxW, 305x155x229
Weight	Kg	<5
Surge	R	IEEE C62.41, 1.2/50us Combination Wave, ±6kV
Supply voltage	VAC	40-130
Maximum input current	A	15
Power consumption	W	<45

Dimensions (mm)

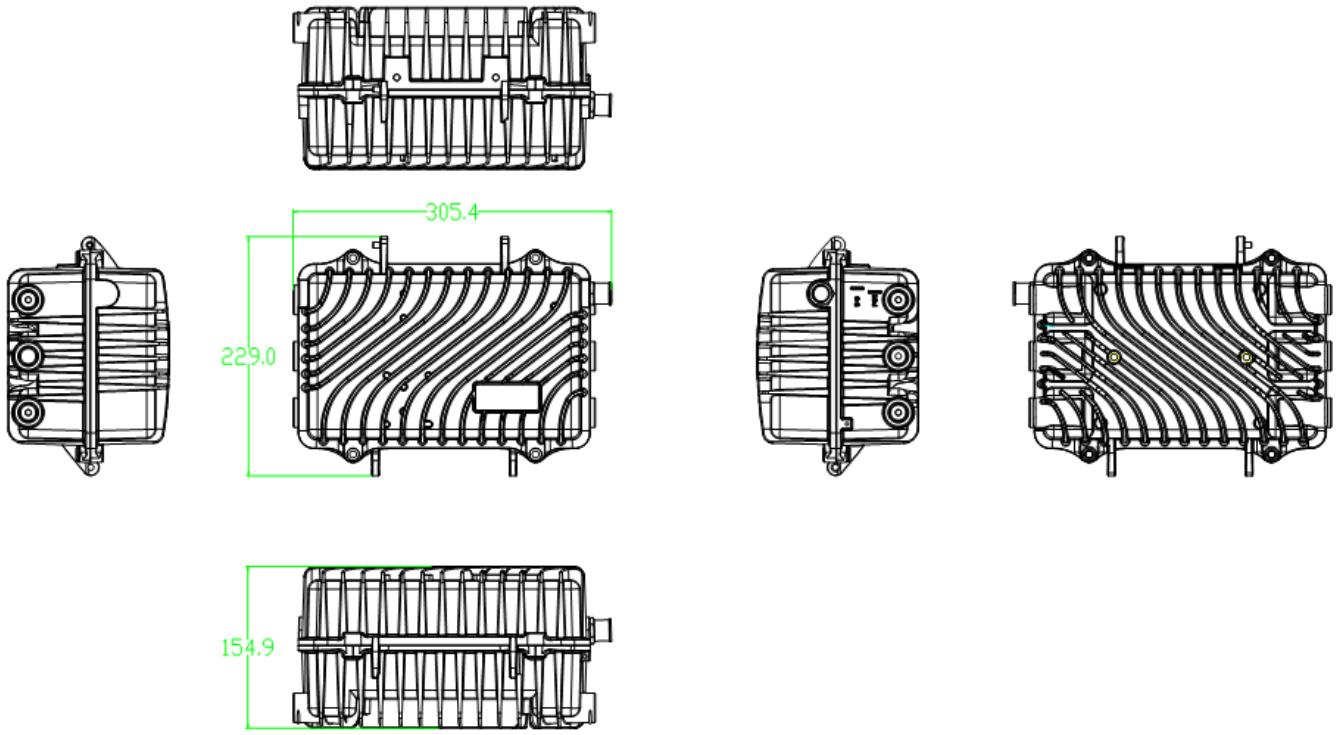

V4N-P 4 port Node

Block Diagram

Configuration I: Standard

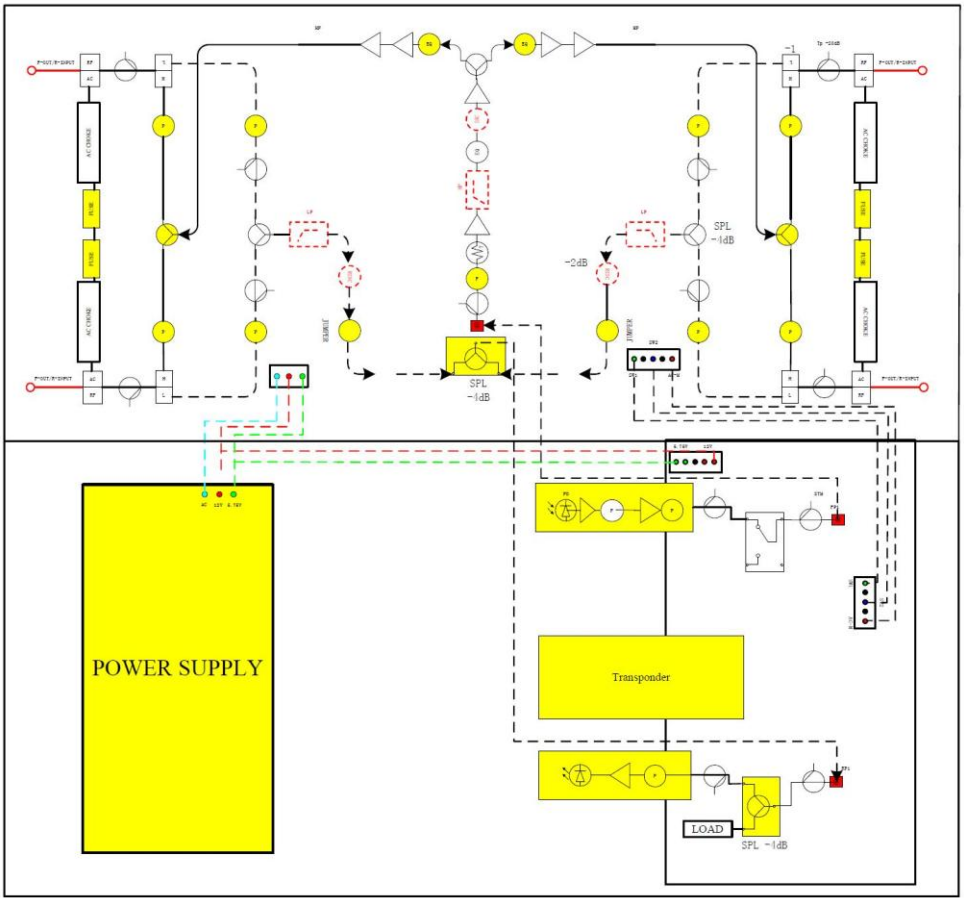

10400 Overland Road #408 Boise, ID 83709-1449, USA
Tel: 208.935.6317 Fax: 208.935.6234
Http://www.valesys.com
Document #: 01-01-018 Revision: 1.6

V4N-P 4 port Node

Block Diagram

Configuration II: **Forward Path: Redundant**
Return Path: Redundant

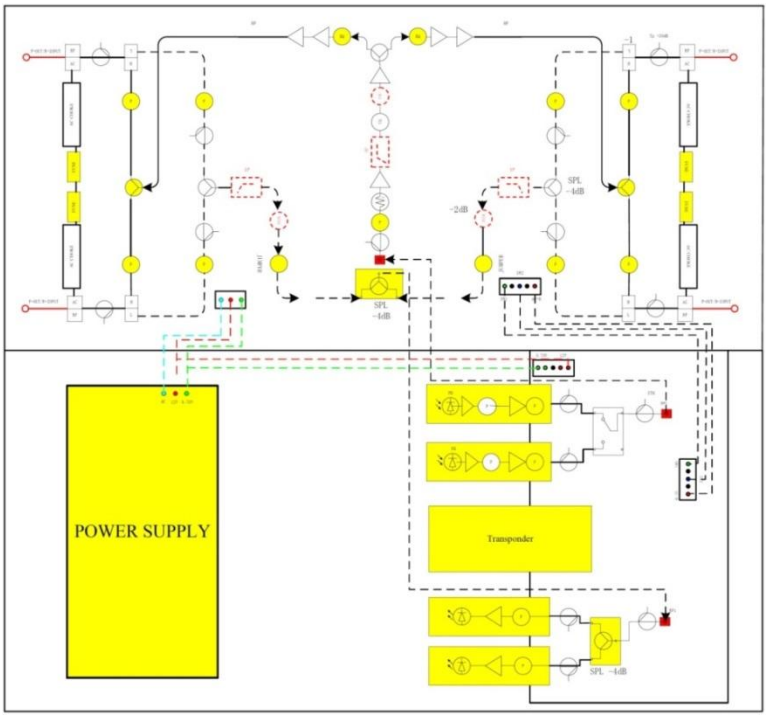

Configuration III: **Forward Path: Redundant**
Return Path: Segmented

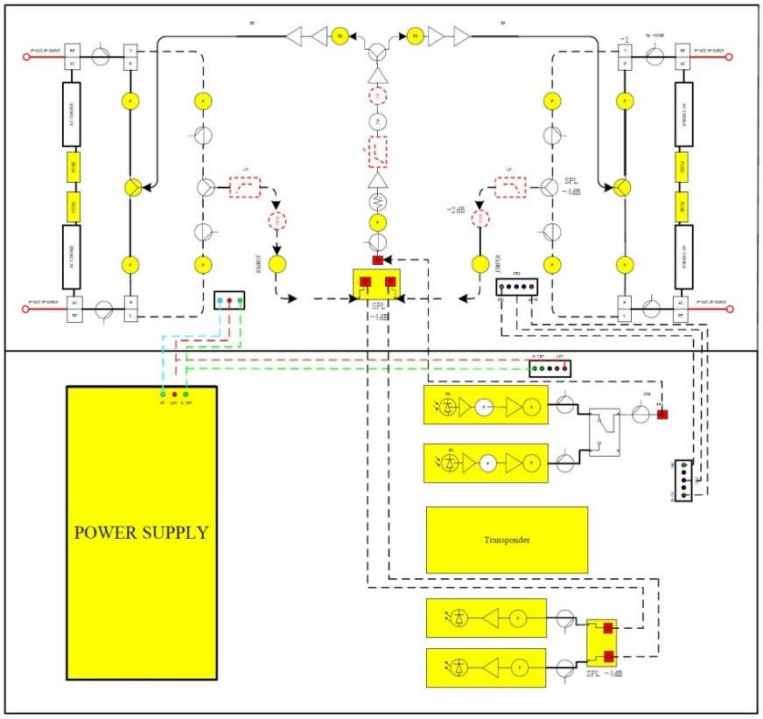

10400 Overland Road #408 Boise, ID 83709-1449, USA
Tel: 208.935.6317 Fax: 208.935.6234
Http://www.valesys.com
Document #: 01-01-018 Revision: 1.6

V4N-P 4 port Node

Ordering Information

Character #	1	2	3	4	5	6	7	8	9	10	11	12	13	14	15	16	17	18	19
Field #	**1**				**2**	**3**	**4**	**5**		**6**		**7**	**8**	**9**			**10**	**11**	**12**
Model #	**V4N-P**			**-**	**4**	**1**	**1**	**1**	**-**	**D**	**2**	**0**	**0**	**S**	**A**	**-**	**0**	**1**	**0**

FIELD		
1	**V4N-P**	4 ports, 50dBmV output level
2	Bandwidth Split:	
	4	42/54 Split
	6	65/85 Split
	8	85/104 Split
	2	204/258 Split
3	Basic Configuration:	
	1	None Segmentation(4:1 return)
	2	Return signal switch(2:1 return X2)
4	Forward receiver setting:	
	1	1RX, -2dBm to -8dBm low optical input, AGC
	2	1RX, +2dBm to -3dBm standard optical input
	3	2RX, 2*(-2dBm to -8dBm low optical input, AGC)
	4	2RX, 2*(+2dBm to -3dBm standard optical input)
5	Return transmitter setting:	
	0	0TX
	1	1TX, w/o burst mode operation
	2	1TX, w/ burst mode operation
	3	2TX, 2*(w/o burst mode operation)
	4	2TX, 2*(w burst mode operation)
6	Return Transmitter:	
	00	None
	F1	1310 FP, 0dBm w/ iso
	F2	1310 FP, 3dBm w/ iso
	F3	1550 FP, 0dBm w/ iso
	F4	1550 FP, 3dBm w/ iso
	D1	1310 DFB, 0dBm w/ iso
	D2	1310 DFB, 3dBm w/ iso
	D3	1550 DFB, 0dBm w/ iso
	D4	1550 DFB, 3dBm w/ iso
	D5	1590 DFB, 0dBm w/ iso
	D6	1590 DFB, 3dBm w/ iso
	D7	1610 DFB, 0dBm w/ iso
	D8	1610 DFB, 3dBm w/ iso

10400 Overland Road #408 Boise, ID 83709-1449, USA
Tel: 208.935.6317 Fax: 208.935.6234
Http://www.valesys.com
Document #: 01-01-018 Revision: 1.6

V4N-P 4 port Node

Ordering Information

Character #	1	2	3	4	5	6	7	8	9	10	11	12	13	14	15	16	17	18	19
Field #	**1**				**2**	**3**	**4**	**5**		**6**		**7**	**8**	**9**			**10**	**11**	**12**
Model #	**V4N-P**			**-**	**4**	**1**	**1**	**1**	**-**	**D**	**2**	**0**	**0**	**S**	**A**	**-**	**0**	**1**	**0**

FIELD		
	C1	CWDM DFB 1270 3dBm
	C2	CWDM DFB 1290 3dBm
	C3	CWDM DFB 1310 3dBm
	C4	CWDM DFB 1330 3dBm
	C5	CWDM DFB 1350 3dBm
	C6	CWDM DFB 1370 3dBm
	C7	CWDM DFB 1390 3dBm
	C8	CWDM DFB 1410 3dBm
	C9	CWDM DFB 1430 3dBm
	CA	CWDM DFB 1450 3dBm
	CB	CWDM DFB 1470 3dBm
	CC	CWDM DFB 1490 3dBm
	CD	CWDM DFB 1510 3dBm
	CE	CWDM DFB 1530 3dBm
	CF	CWDM DFB 1550 3dBm
	CG	CWDM DFB 1570 3dBm
	CH	CWDM DFB 1590 3dBm
	CJ	CWDM DFB 1610 3dBm
7	WDM type	
	0	No WDM
	1	w/ 1*WDM (1310nm / 1550nm)
	2	w/ 2*WDM (1310nm / 1550nm)
	3	w/ 1*WDM (1610nm / 1550nm)
	4	w/ 2*WDM (1610nm / 1550nm)
	5	w/ O-band WDM- CH1 / 1470nm
	6	w/ O-band WDM- CH2 / 1490nm
	7	w/ O-band WDM- CH3 / 1510nm
	8	w/ O-band WDM- CH4 / 1530nm
	9	w/ 3*WDM (1310nm / 1490nm/ 1550nm / 1610nm)
	A	w/ O-band WDM- CH1 / 1410nm
	B	w/ O-band WDM- CH2 / 1430nm
	C	w/ O-band WDM- CH3 / 1450nm
	D	w/ O-band WDM- CH4 / 1470nm
	E	Others (Customized)

10400 Overland Road #408 Boise, ID 83709-1449, USA
Tel: 208.935.6317 Fax: 208.935.6234
Http://www.valesys.com
Document #: 01-01-018 Revision: 1.6

V4N-P 4 port Node

Ordering Information

Character #	1	2	3	4	5	6	7	8	9	10	11	12	13	14	15	16	17	18	19
Field #	**1**				**2**	**3**	**4**	**5**		**6**		**7**	**8**	**9**			**10**	**11**	**12**
Model #	**V4N-P**			**-**	**4**	**1**	**1**	**1**	**-**	**D**	**2**	**0**	**0**	**S**	**A**	**-**	**0**	**1**	**0**

FIELD		
8	Optical Coupler	
	0	No Optical Coupler
	1	w/ Optical Coupler
9	Optical connector:	
	SA	SC/APC
	FA	FC/APC
	SU	SC/UPC
10	Transponder setting:	
	0	No Transponder
	1	w/ Transponder
11	Power Supply:	
	1	40V~130V AC
12	Return Switch:	
	0	w/o RSW
	1	w/ RSW

10400 Overland Road #408 Boise, ID 83709-1449, USA
Tel: 208.935.6317 Fax: 208.935.6234
Http://www.valesys.com
Document #: 01-01-018 Revision: 1.6