1.2G VLE-1200 Line Extender

Description

- The VLE-1200 is specifically designed for use in CATV optical network with bandwidth up to 1218MHz. It is an economic line extender equipment with high performance, compact size, high reliability and a user-friendly operation.
- The VLE-1200 provides a single high-level RF output port or two lower-level RF output ports in a strand-mount configuration. It is capable of providing 48dBmV output level with single port or 44dBmV output level with two ports at 1218MHz all SC QAM(54dBmV analog equivalent (virtual) @1218MHz). It has a low power consumption to fit the multiple application at the field. It shares common plug-in accessories with the VLE serial devices.
- The goal for the product is to provide system distributer an economical and robust line extender in CATV optical network.

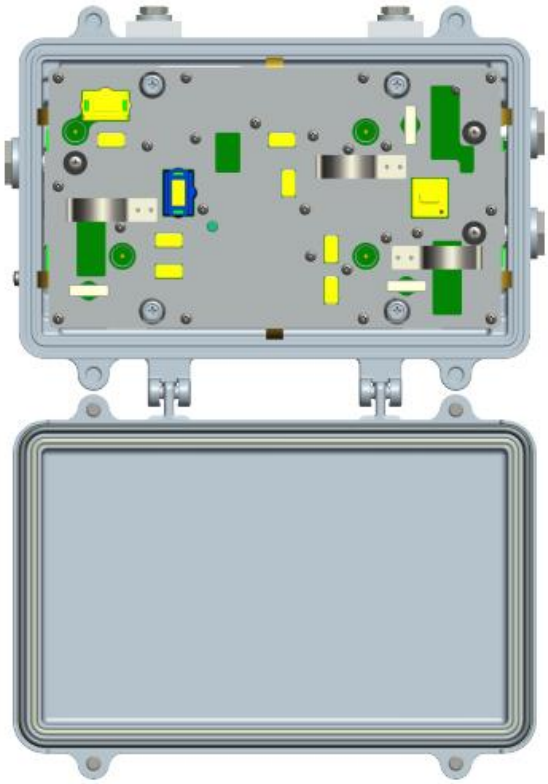

Features

- 1218MHz bandwidth
- 48dBmV @1218MHz output (Digital) high level with jumper
- JXP PAD for level attenuation
- JXP EQ for slope adjustment
- 10A power current passing capability
- Band diplexer 204/258
- The bandwidth of Return path is 5 to 204MHz
- Wide operation temperature range -40~+60 degree C
- Low power consumption

10400 Overland Road #408 Boise, ID 83709-1449, USA
Tel: 208.935.6317 Fax: 208.935.6234 Http://www.valesys.com
Document #: 01-01-001 Revision: 1.0

1.2G VLE-1200 Line Extender

Specification

Parameter	Unit	Specification
Reverse		
General		
Bandwidth	MHz	5 to 204MHz
Flatness	dB	+/-0.75dB@0dB Slope
Gain Max(1Port)	dB	27
Gain Min (2Ports)	dB	23
Return Loss	dB	-16.0
Test Point Level	dB	-20+/-1 with jumper
Slope	dB	0+/-1
Level control steps	dB	1 (0~20)
Slope control steps	dB	1 (0~5)
NF	dB	8
NPR	dB	20@40dB
HUM@7A	dB	-60.0
Forward Parameters		
RF Performance		
Bandwidth	MHz	258 to 1218MHz
Flatness	dB	+/-0.75dB@14.5dB Slope
Gain (1Port)@1218MHz	dB	38
Gain (2 Ports)@1218MHz	dB	34
Slope	dB	14.5+/-1
Return Loss	dB	-16.0
Test Point Level	dB	-20+/-1 with jumper
Level control steps	dB	1 (0~20)
Slope control steps	dB	1 (5~22)
Input Inverse EQ range	dB	1 (0~5)
Input Cable EQ range	dB	1 (0~10)
Output Cable EQ range	dB	1 (0~17)
NF	dB	12
Input level	dBmV	10
HUM@7A	dB	-60

1.2G VLE-1200 Line Extender

Specification

Link Performance(14.5dB Slope)		
Operational level feeders(1 port)	dBmV	33.5/ 37.9/48 at 258/550/1218MHz
MER (256QAM(258~1000MHz+1OFDM(1000~1200MHz))	dB	40
General Specifications		
Water and Dust resistance	R	IP68
Housing dimensions	mm	268.3x199.5x116
Weight	Kg	4.5
Surge	R	IEEE C62.41, 1.2/50us Combination Wave, ±6kV
Supply voltage	VAC	45-90
Consumption current(@90/60/45VAC)	A	0.28/0.43/0.57
Maximum input current	A	10
Power consumption	W	<26

10400 Overland Road #408 Boise, ID 83709-1449, USA
Tel: 208.935.6317 Fax: 208.935.6234 Http://www.valesys.com
Document #: 01-01-001 Revision: 1.0

1.2G VLE-1200 Line Extender

Absolute Maximum Ratings

Parameter	Symbol	Unit	Min	Max
Operating temperature	Top	˚C	-40	60
Humidity	H	%	5	95, non-condensing

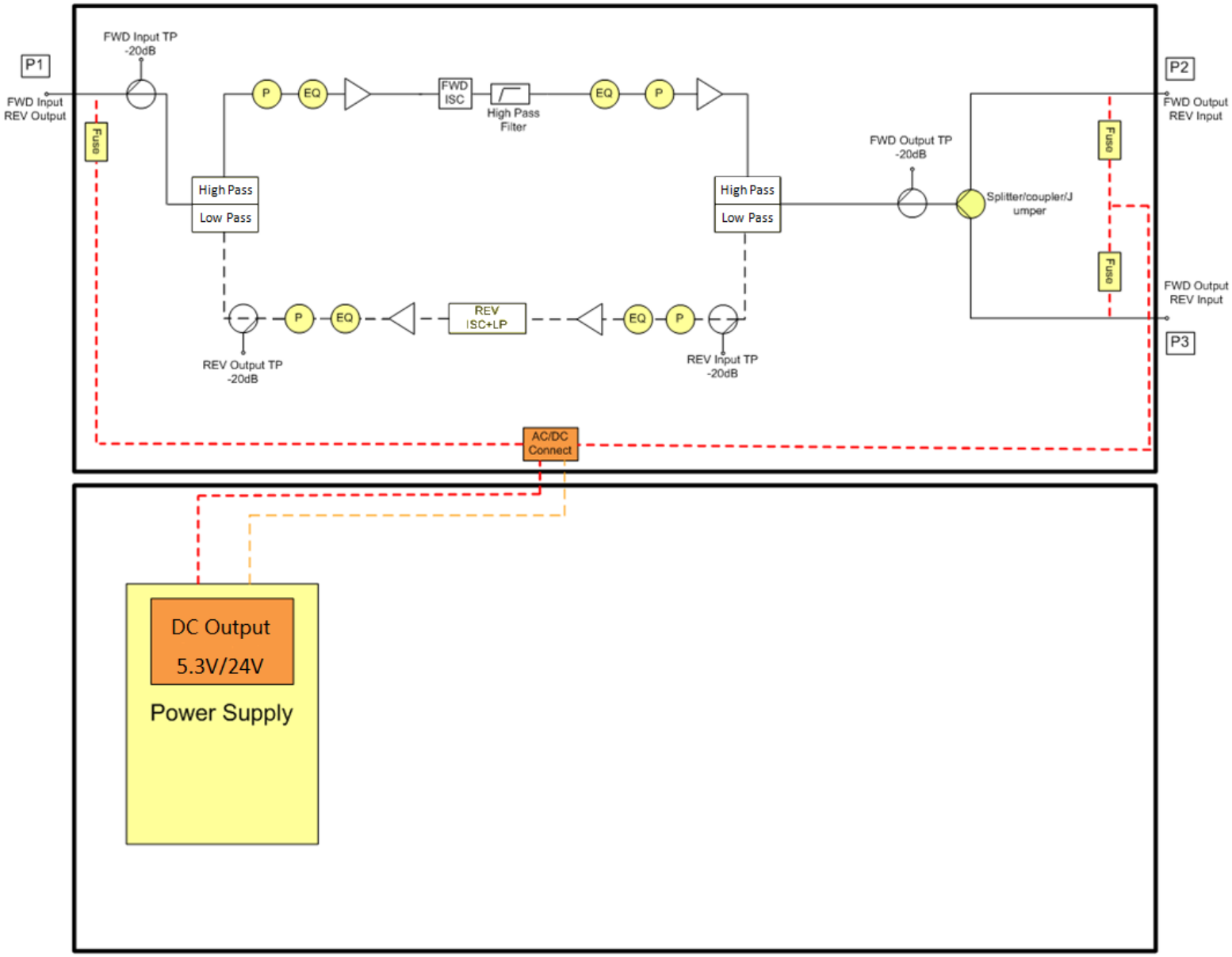

1.2G VLE-1200 Line Extender

Dimensions (mm)

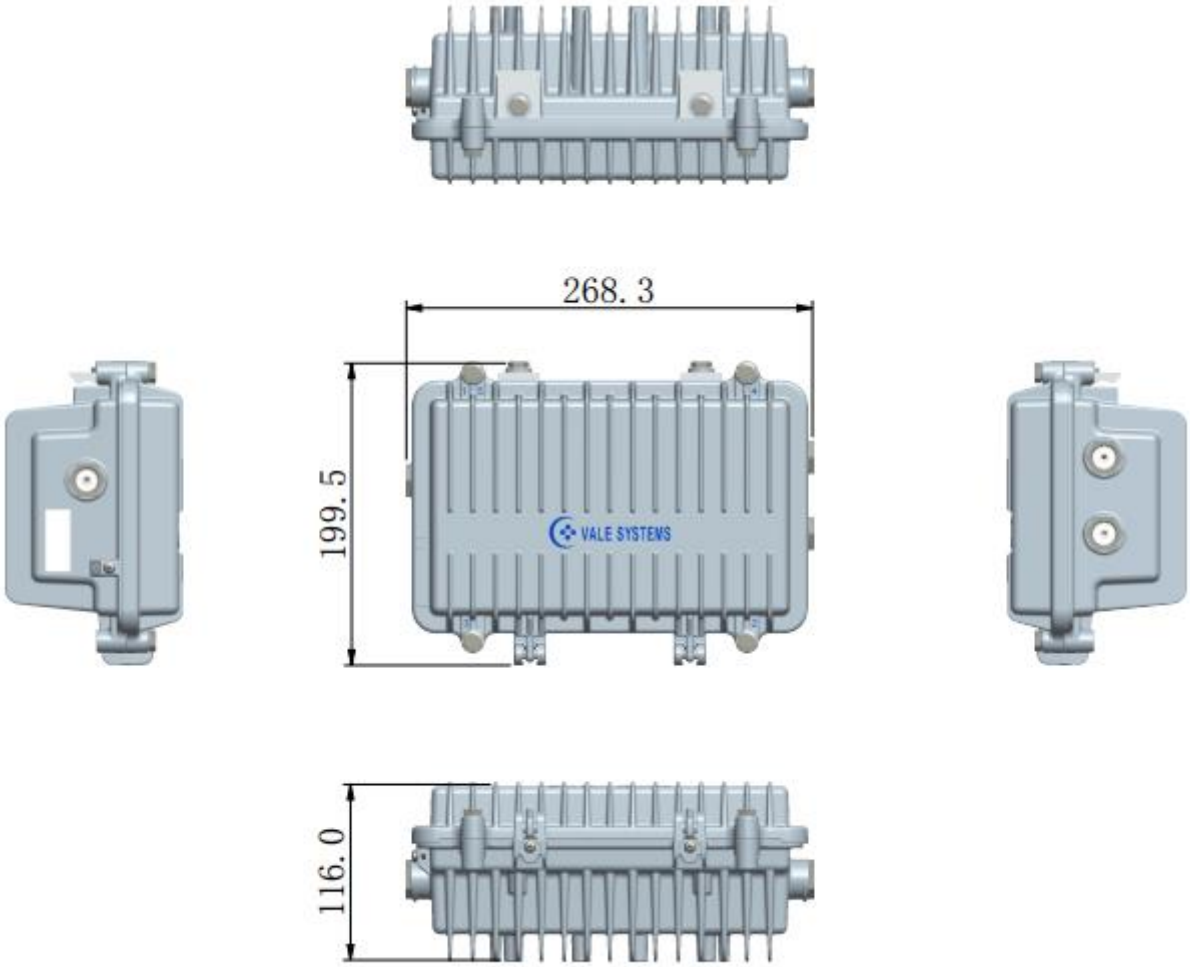

1.2G VLE-1200 Line Extender

Order Information

Character #	1	2	3	4	5	6	7
Field #	1		2	3	4		5
Model #	VLE-1200	-	1	2	14	-	1

FIELD		
1	VLE-1200	Line Extender (1218MHz)
2	Port:	
	1	One Port with Jumper
	2	Two Ports with Splitter
3	Bandwidth Split:	
	2	204/258 Split
4	Slope:	
	14	14.5dB
5	Power Supply:	
	1	45V~90V AC