VLTA Trunk Amplifier for Balance

Description

The VLTA Trunk Amplifier for Balance includes a variety of gain, output, and frequency configurations, to provide system designer with various choice for the network architectures being deployed. The Amplifier are economic platform with high performance. There are 3 ports active output and can be upgraded to Node. It is also very useful in long-reach applications, or as a terminating bridge in more traditional architectures.
The VLTA Trunk Amplifier for Balance has three forward outputs and is ideally suited for providing high (bridge) level RF output for the feeder network.

Features

- 1000MHz bandwidth
- 3 port output level 54dBmV@1000MHz in 78CH NTSC+75CH QAM
- Low RF input level and high RF output level
- JXP PAD for level attenuation
- AGC self-loading gain compensation.
- Band diplexer selection for 42/54 or 65/85 or 204/258
- Wide operation temperature range -40~+60 degree C
- Cable equalizer using JXP PAD for slope adjustment
- With DC power LED
- 15A power current passing capability
- RoHS compliance

10400 Overland Road #408 Boise, ID 83709-1449, USA
Tel: 208.935.6317 Fax: 208.935.6234
Http://www.valesys.com
Document #: 01-01-021 Revision: 1.0

VLTA Trunk Amplifier for Balance

Specification

Parameters	Unit	Specification	Note
General Specifications			
Operating temperature	℃	-40 to +60	
Humidity	%	95%, non-condensing	
Water and Dust resistance	R	IP68	
Housing Dimensions	mm	305.4*229*154.9	
Weight	Kg	<5	
Surge	R	IEEE C62.41, 1.2/50us Combination Wave, ±6KV	
Maximum input current	A	15	
Power consumption	W	<42	
Forward Parameters			
Bandwidth	MHz	54/85/258 to 1000	
Flatness	dB	±1.0	
Return loss	dB	>16	
Test Point Level	dB	-20±1.0	
Gain @ 1000MHz	dB	42 ±1	
Output Level (54/550/750/1000MHz)	dBmV	38/45/48/52	10dBmV IN W/O AGC
Output Level (54/550/750/1000MHz)	dBmV	32/39/42/46	10dBmV IN W/ AGC
Distortions			
CTB (78CH NTSC + 75CH QAM)	dBc	>73	
CSO (78CH NTSC + 75CH QAM)	dBc	>71	
X-MOD (78CH NTSC + 75CH QAM)	dBc	>70	
HUM@ 15A	dB	>65	54/65~750MHz
		>55	750~1000MHz
NF	dB	<10	54/65~750MHz
		<13	750~1000MHz

10400 Overland Road #408 Boise, ID 83709-1449, USA
Tel: 208.935.6317 Fax: 208.935.6234
Http://www.valesys.com
Document #: 01-01-021 Revision: 1.0

VLTA Trunk Amplifier for Balance

Specification

Group Delay			
Group Delay @55.25MHz	ns	<50	
Group Delay @61.26MHz	ns	<18	
Group Delay @67.25MHz	ns	<10	
Group Delay @77.25MHz	ns	<6	
Reverse Parameters			
Bandwidth	MHz	5 to 42/65/204	
Gain	dB	19±0.5	
Flatness	dB	±1.0	
Return Loss	dB	>16	
Test Point Level	dB	-20±1.0	
Distortions (Reverse output level @6CH +35dBmv Flat output/ +25℃)			
CTB	dBc	>76	
CSO	dBc	>66	
X-MOD	dBc	>70	
HUM@15A	dB	>65	
NF	dB	<13	
Group Delay			
Group Delay @5MHz	ns	<55	
Group Delay @10MHz	ns	<7	
Group Delay @35MHz	ns	<10	
Group Delay @38.5MHz	ns	<30	

Note: Unless otherwise noted, specifications reflect typical performance.

10400 Overland Road #408 Boise, ID 83709-1449, USA
Tel: 208.935.6317 Fax: 208.935.6234
Http://www.valesys.com
Document #: 01-01-021 Revision: 1.0

VLTA Trunk Amplifier for Balance

Dimensions

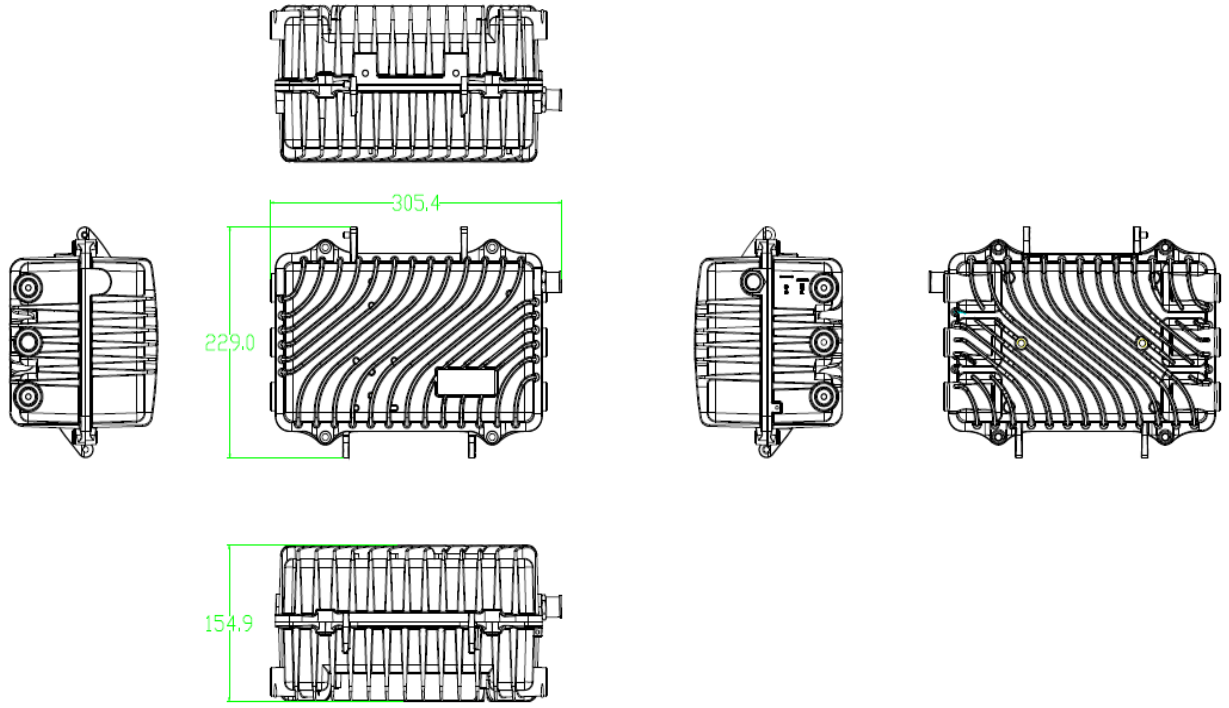

Block Diagram

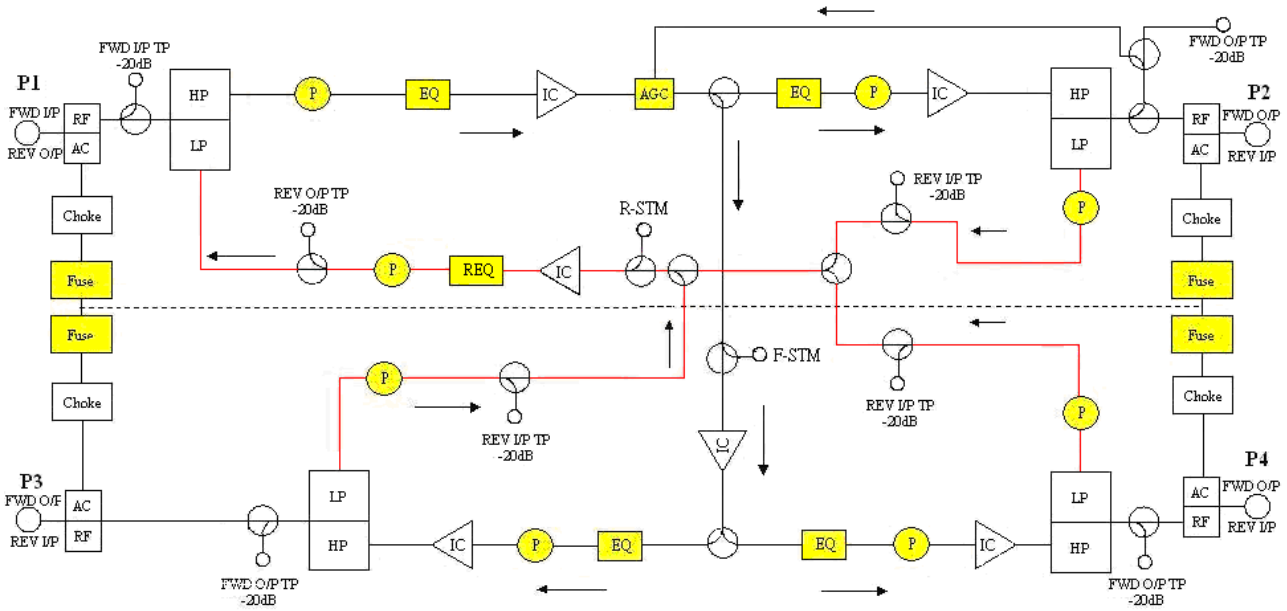

VLTA Trunk Amplifier for Balance

Order information

Character #	1	2	3	4	5	6	7	8	9	10	11
Field #	1		2	3	4		5		6		7
Model #	VLTA	-	B	4	14	-	0	-	0	-	1

FIELD		
1	VLTA	Trunk Amplifier (1000MHz)
2	**Balance:**	
	B	Balance
3	**Bandwidth Split:**	
	4	42/54 Split
	6	65/85 Split
	2	204/258 Split
4	**Slope:**	
	07	07dB
	10	10dB
	12	12dB
	14	14dB
5	**Gain Control**	
	0	W/O Gain Control
	1	W/O Gain Control (AGC bypass)
	2	Thermal Gain Control
	3	Auto Gain Control (Single Channel Pilot=439.25MHz)
	4	Auto Gain Control (Single Channel Pilot=451.25MHz)
	5	Auto Gain Control (Single Channel Pilot=499.25MHz)
	6	Auto Gain Control (Single Channel Pilot=711.25MHz) (Developing)
6	**Transponder setting:**	
	0	No Transponder
	1	W/ Transponder (Developing)
7	**Power Supply:**	
	1	40V~130V AC

10400 Overland Road #408 Boise, ID 83709-1449, USA
Tel: 208.935.6317 Fax: 208.935.6234
Http://www.valesys.com
Document #: 01-01-021 Revision: 1.0