VLink Optical Transmission Platform

Description

The VLink is a high performance broadband optical headend platform which consists of a series of modules with hot-swap capability. It features compact structure, high density modular design, high reliability and high performance-price ratio. This provides network operators a simple, fast and flexible way to setup and update the system to meet emerging broadband network requirements.
The VLink platform is housed in a standard 19-inch chassis and is 3 rack units high, with 17 slots for active modules. It can accommodate one power supply and up to 15 standard modules or 2 power supplies (with power sharing capability) and up to 13 standard modules. VLink series modules includes forward transmitter module, return receiver module and network management module.

Features

- High density modular design
- Up to 17 modules per chassis
- Hot-swap design for all modules
- Redundancy power supply available
- Low power consumption
- Superior heat dissipation and air circulation
- Advanced SNMP-oriented network monitoring over ethernet network interface
- User-friendly alarm setup

Modules

VLink optical platform include:
- Chassis----CL-CH
- Power supply module----CL-PS
- 1310nm forward transmitter----VL-FTX
- Return receiver---VL-RRX
- Management module----VL-EMS

Block Diagram

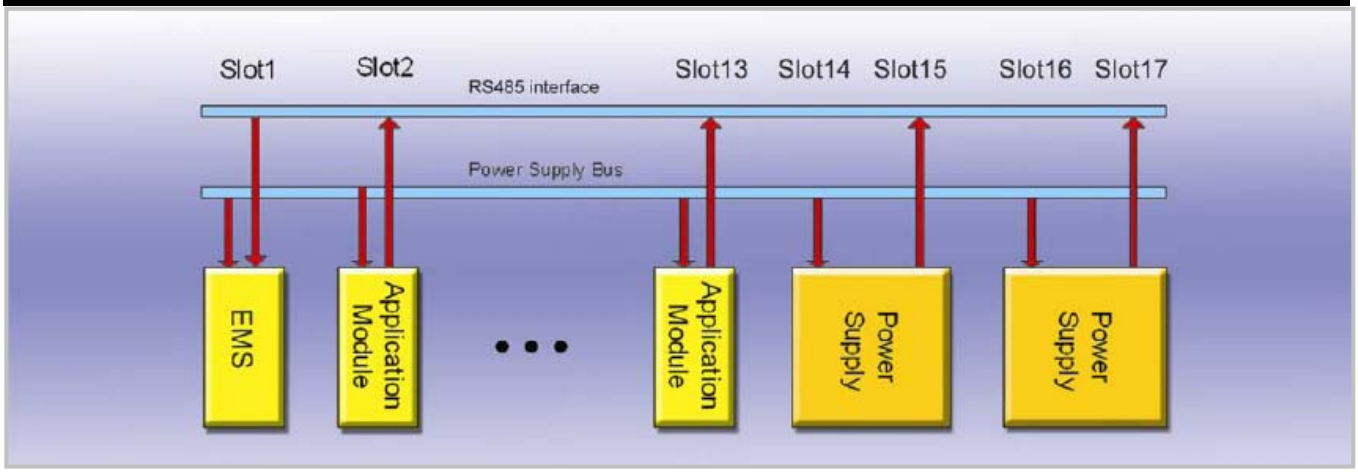

10400 Overland Road #408 Boise, ID 83709-1449, USA
Tel: 208.935.6317 Fax: 208.935.6234 Http://www.valesys.com
Document #: 01-01-006 Revision: 1.1